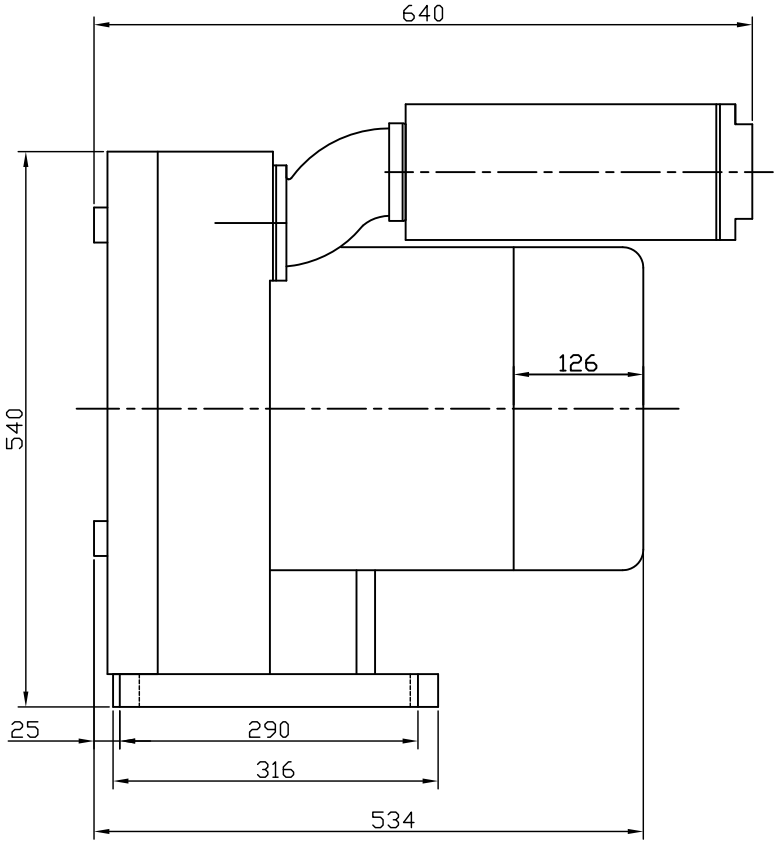

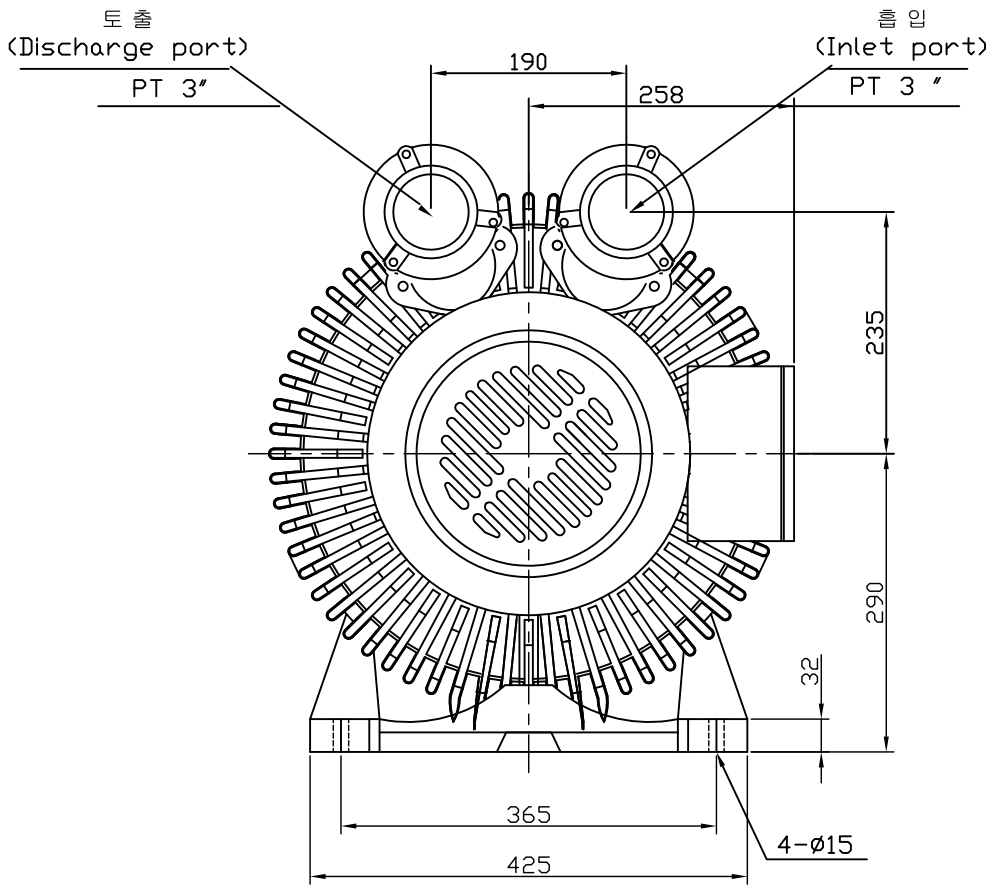

DATE	MARK	REMARK	DSGN	CHK	APRD

TYPE
RING BLOWER(Reg.Blower)
IHB-1000

APPROVED		CHECK	DESIGN	DRAWN

IN HA ELECTRIC

DWG.NAME
OUTLINE DIMENSION

THIRD ANGLE PROJECTION	SCALE	N/S	DATE 99.05.30

REF. DWG. NO. 3ø12.6kw2p

DWG. NO. 10000003